RDL® Radio Design Labs®

SPECIALISTS IN PRACTICAL PRECISION ENGINEERING™

AMX-84

M A N U A L

RDL • P.O. Box 1286 • Carpinteria, CA., USA 93014 • (805) 684-5415 • FAX (805) 684-9316 • http://www.rdlnet.com

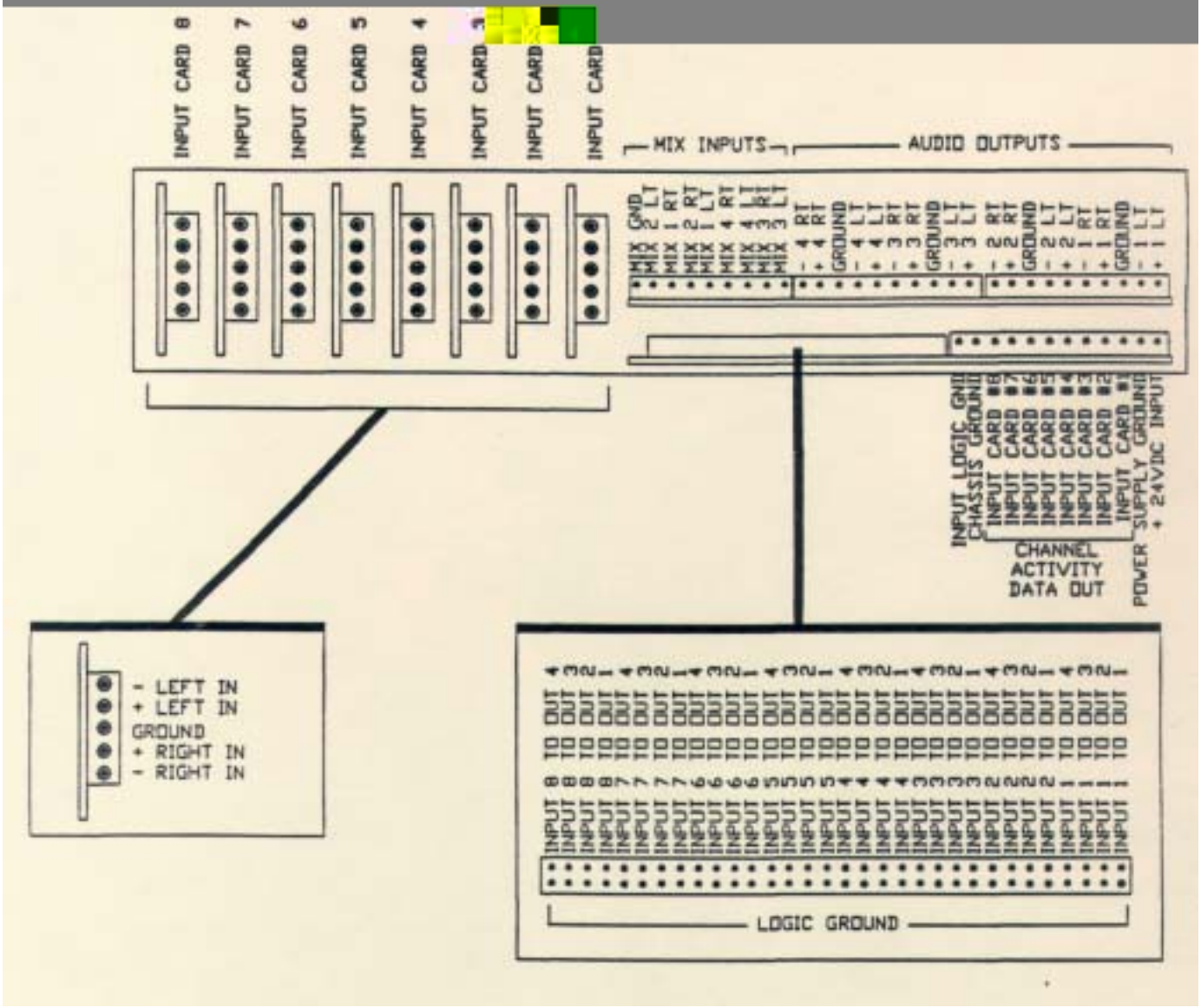
INPUT CARD 8
INPUT CARD 7
INPUT CARD 6
INPUT CARD 5
INPUT CARD 4
INPUT CARD 3
INPUT CARD 2
INPUT CARD 1
MIX INPUTS
AUDIO OUTPUTS
MIX GND
MIX 2 LT
MIX 1 RT
MIX 2 RT
MIX 1 LT
MIX 4 RT
MIX 4 LT
MIX 3 RT
MIX 3 LT
- 4 RT
+ 4 RT
GROUND
- 4 LT
+ 4 LT
- 3 RT
+ 3 RT
GROUND
- 3 LT
+ 3 LT
- 2 RT
+ 2 RT
GROUND
- 2 LT
+ 2 LT
- 1 RT
+ 1 RT
GROUND
- 1 LT
+ 1 LT
INPUT LOGIC GND
CHASSIS GROUND
INPUT CARD #8
INPUT CARD #7
INPUT CARD #6
INPUT CARD #5
INPUT CARD #4
INPUT CARD #3
INPUT CARD #2
INPUT CARD #1
CHANNEL ACTIVITY DATA OUT
POWER SUPPLY GROUND
+ 24VDC INPUT
- LEFT IN
+ LEFT IN
GROUND
+ RIGHT IN
- RIGHT IN
INPUT 8 TO OUT 4
INPUT 8 TO OUT 3
INPUT 8 TO OUT 2
INPUT 8 TO OUT 1
INPUT 7 TO OUT 4
INPUT 7 TO OUT 3
INPUT 7 TO OUT 2
INPUT 7 TO OUT 1
INPUT 6 TO OUT 4
INPUT 6 TO OUT 3
INPUT 6 TO OUT 2
INPUT 6 TO OUT 1
INPUT 5 TO OUT 4
INPUT 5 TO OUT 3
INPUT 5 TO OUT 2
INPUT 5 TO OUT 1
INPUT 4 TO OUT 4
INPUT 4 TO OUT 3
INPUT 4 TO OUT 2
INPUT 4 TO OUT 1
INPUT 3 TO OUT 4
INPUT 3 TO OUT 3
INPUT 3 TO OUT 2
INPUT 3 TO OUT 1
INPUT 2 TO OUT 4
INPUT 2 TO OUT 3
INPUT 2 TO OUT 2
INPUT 2 TO OUT 1
INPUT 1 TO OUT 4
INPUT 1 TO OUT 3
INPUT 1 TO OUT 2
INPUT 1 TO OUT 1
LOGIC GROUND

Certificate of Warranty

Installation of these products by the Purchaser shall constitute Purchaser's acknowledgement and acceptance of the terms and conditions for sale and of this warranty, and shall constitute the Purchaser's determination of the suitability of this product for the Purchaser's intended application. Radio Design Labs warrants to the Purchaser that these products are free from defects in material and workmanship. This warranty applies to the period of *three years from the date of shipment,* except for component parts purchased from other sources and assembled in Radio Design Labs' production. Such component parts bear only the warranty of the manufacturer thereof in effect at the time of shipment to the Purchaser. Radio Design Labs will, without charge, and after written notice has been received and acknowledged by Radio Design Labs, repair this product if proved to be defective according to the usage of the trade, when such equipment is received by Radio Design Labs at the location it designates with shipment costs prepaid by the Purchaser. Radio Design Labs shall not be liable for any expense whether for repairs, replacements, material, service, or otherwise, incurred by the Purchaser or modifications made by the Purchaser to the product. No equipment shall be deemed defective if it shall fail to operate in a normal or proper manner due to exposure to excessive moisture in the atmosphere, excessive temperature extremes, improper environmental cleanliness, or any other environment not consistent with the principles of good engineering practice. In no event shall Radio Design Labs have any liability for consequential damage or expense directly or indirectly arising from the use of the products, or any inability to use it either separately or in combination with other equipment or materials, or from any other cause, whether used in accordance with instructions or not. This warranty is void if equipment is altered in any way by others than Radio Design Labs. This warranty is in lieu of all others, either expressed or implied. No representative is authorized to assume for Radio Design Labs any other liability in connection with Radio Design Labs products.

RDL™ reserves the right to change design parameters and specifications at any time without notice. The performance measurements reflect the products at the time of printing.

AMX-84 MANUAL TABLE OF CONTENTS

FRONT INSIDE COVER

AMX-84 Input/Output Connections

Section 1 DESCRIPTION

1.0 Overall Description

1.1 Control Functions

1.2 Audio Circuits

Section 2 PERFORMANCE

Section 3 INSTALLATION

3.1 Mounting

3.2 Connection Diagram

3.3 Power Supply

3.4 Audio Input Wiring

3.5 Audio Output Wiring

3.6 Mix Inputs Wiring

3.7 Control Inputs

3.8 Tally Outputs

Section 4 OPERATION AND ADJUSTMENTS

4.1 Audio Level Adjustments

4.2 Activity L.E.D.S

Section 5 CIRCUIT DESCRIPTION

5.1 Signal Path Discussion

5.2 Audio Input Stage

5.3 Audio Switching

5.4 Control Signals on Input Board

5.5 Control Signals from Logic Board

5.6 L.E.D. Activity Driver Circuits on Logic Board

5.7 Power Supplies on Logic Board

Section 6 DIAGRAMS AND LISTS

6.0 Input Board Schematic

6.1 Input Board Parts Layout

6.2 Input Board Parts List

6.3 Logic Board Input Logic Buffer Schematic

6.4 Logic Board Activity L.E.D. Driver Schematic

6.5 Logic Board Power Supply Schematic

6.6 Logic Board Parts Layout

6.7 Logic Board Parts List

6.8 Output Board Schematic

6.9 Output Board Parts Layout

7.0 Output Board Parts List

7.1 IC Pinouts

REAR INSIDE COVER

Board Interconnect Diagram

SECTION 3: INSTALLATION

3.1 MOUNTING The AMX-84 mounts in a standard 19" equipment rack. The chassis is designed for proper ventilation. Adequate space must be provided to permit ambient air flow through the ventilation slots in the chassis. The AMX-84 does not have any peculiar thermal requirements.

3.2 CONNECTION DIAGRAM All input connections are detailed on the diagram printed on the inside front cover of this manual. Please refer to this diagram for all the following descriptions.

3.3 POWER SUPPLY Input power to the AMX-84 is 24 vdc. Power must be connected with the power source disconnected. Power enters through the barrier block on the Logic Board, at lower right corner of the AMX-84 (as viewed from the rear). The correct power terminals are marked on the circuit board. Also, refer to the inside front cover of this manual for proper connection terminals. It is usual for the AMX-84 to have no more than 4 inputs routed to all four outputs simultaneously. Therefore, if the RDL PS-24A power supply (400mA) is being used, the available current is sufficient. If it is anticipated that all input channels are likely to be selected to feed all output channels, it is recommended that a second PS-24A be connected in parallel with the first supply. This provides supply redundancy as well as ample additional current.

3.4 AUDIO INPUT WIRING Audio inputs may be either balanced or unbalanced. Balanced audio is wired to the "+" and "-" input terminals, with the shield connected to "Ground". For unbalanced sources, connect the "hot" center-conductor to input "+"; and connect the shield to "Ground". It is not necessary to terminate the unused "-" input terminal in this case.

3.5 AUDIO OUTPUT WIRING Audio outputs are connected to the twenty terminals beginning at the RIGHT side of the Output Card. Balanced wiring typically uses only the "+" and "-" terminals of an output; the shield is normally connected only at the destination "input" being fed by the AMX-84 output. If it is necessary to connect the shield, a Ground terminal is provided. Unbalanced feeds are connected with the "hot" center-conductor wired to the "+" output terminal and the shield connected to the Ground terminal. For unbalanced outputs, do not connect the unused "-" terminal to ground. Note that all Ground terminals are common to the AMX-84 chassis.

3.6 MIX INPUTS WIRING Direct mix inputs are provided into the AMX-84 output amplifiers via the "Mix Inputs" barrier block on the Output Card. These inputs are to be used if there is a particular audio source which is desired to ALWAYS feed the particular audio output channel, regardless of the switching function selected. This might be one of the inputs fed into the AMX-84 for part-time routing to other outputs. It might also be an auxiliary audio source. Most typically, some or all outputs of another AMX-84 would be wired into these inputs. These inputs are 22k-Ω unbalanced. If input wires are run any distance, a single-conductor shielded wire is suggested. If an immediately adjacent AMX-84 is feeding the Mix Inputs, an unshielded jumper wire is normally sufficient.

3.7 CONTROL INPUTS Control inputs are made through the 64-Pin header. The diagram on the front cover shows the pinout, as seen from the rear of the AMX-84. Care should be taken to insure that the external switching functions are connected to the correct input control terminals. The entire bottom row of terminals is Logic Ground. For remote switching, a control terminal (top row) is connected (physically or electrically) to the Logic Ground. The Logic Ground terminals are all common, and are connected to the "Input Logic Ground" terminal on the barrier strip immediately to the right of the 64-pin header. The second terminal on this barrier block is Chassis Ground. These two terminals are normally strapped together. In unusual rf environments, it may be necessary to isolate the logic ground from the chassis ground by removing the jumper between the first two terminals of the barrier strip. If this jumper is removed, then the logic ground is bypassed to chassis ground through a 0.luF capacitor.

3.8 TALLY OUTPUTS Tally Outputs are provided on the remaining terminals of the Logic Card barrier strip. These reflect the activity of each of the eight input cards. If a given input card is active (being fed to ANY output), the corresponding front-panel L.E.D. will illuminate. The related Tally Output pulls to ground through a IK resistor when the L.E.D.is illuminated. It is often desired to trigger an indicator or other device when a given input channel is in use (such as an input card dedicated to a newsroom mic in a broadcast

station...an "on-air" light might be triggered). The logic "low" present at the Tally Output may be used. If dry contacts are desired, a Radio Design Labs LCR1 may be connected. The ST-LCR1 provides DPDT contacts for any purpose. Connect the +24v control input of the ST-LCR1 through a 22kΩ resistor to its +24V supply. Also connect that +24v control input to the appropriate Tally output of the AMX-84, and connect the ground of the AMX-84 to the ground of the ST-LCR1. When the input channel is not in use, the ST-LCR1 relay will be ACTIVATED (CLOSED) and its indicator L.E.D. will be illuminated. When the channel of the AMX-84 is activated, the ST-LCR1 relay will de-activate. It will close again when the AMX-84 channel is no longer active.

SECTION 4: OPERATION AND ADJUSTMENTS

4.1 AUDIO LEVEL ADJUSTMENT The audio adjustments provided are individual Left and Right channel input gain trims. These may be adjusted when a given input channel is active. For balanced audio signals operating at unity gain, these controls should be set nominally fully counter-clockwise. For lower level (typically unbalanced) inputs, adjust the input controls for proper levels.

4.2 ACTIVITY L.E.D.s When an input channel is being fed to ANY of the four output channels, the Activity L.E.D. for that input channel will be illuminated.

SECTION 5: CIRCUIT DESCRIPTION

5.1 SIGNAL PATH DISCUSSION (ref. Dwg 6.0) Audio enters the AMX-84 through one of eight input cards. Each input card is identical. The left and right channel electronics are also identical to each other. Therefore, this discussion will address only the left channel signal path.

5.2 AUDIO INPUT STAGE (ref. Dwg 6.0) Audio is applied to the input barrier block; then to IC1A through coupling capacitors C5 and C6. PI in the feedback loop of IC1A adjusts the gain of IC1A which feeds the audio switching ICs. R17 sets the minimum gain of the input stage.

5.3 AUDIO SWITCHING (ref. Dwg 6.0) Audio switching is accomplished using quad bilateral switches IC2, IC3, IC4 and IC5. One-half of each of these ICs is used to switch the left channel; the other half is used for the right channel. Audio from IC1A is applied to pin 1 of all four audio switching ICs. Because all four switching ICs are identical, we will discuss only IC2. As stated, audio is applied to pin 1. When this audio channel is "OFF", pin 13 of IC2 is low and pin 5 is high. When pin 13 is low, IC2 presents a high impedance to the audio between pins 1 and 2. R19 loads pin 2 to signal common (+7.5 vdc), thereby attenuating the audio approximately 60dB. This attenuated signal passes through R20 into IC2 pin 3. When pin 5 is high, IC2 presents a low impedance to the audio between IC2 pin 3 and pin 4. Pin 4 is signal common. The actual audio voltage present at pin 3 is typically at least 30dB below the noise floor. Therefore the audio is totally attenuated at this point. This signal path is presented to unity-gain buffer IC6A through C9 which removes any slight dc bias errors which could be summed later into the final mix causing noise components or decreased system headroom. Buffered audio from IC6A passes through summing resistor R43 and into J2. All respective terminals of J2 on each input card are connected in parallel by means of a ribbon cable which feeds the combined audio to the active summing amplifier on the AMX-84 output card.

5.4 CONTROL SIGNALS ON INPUT BOARD (ref. Dwg 6.0) Control switching signals enter the input card through Jl. The Jl on each input card connects via its own ribbon cable into a corresponding jack on the logic card. As discussed in section 5.3, two data signals are used to accomplish the audio switch. Using IC2 as the example, pin 5 is high when pin 13 is low. When the data feeding pin 13 switches high, the data feeding pin 5 will go low. These data signals are driven from ICs on the logic board. "High" is +15 vdc; "Low" is nominal circuit ground.

5.5 CONTROL SIGNALS FROM LOGIC BOARD (ref. Dwg 6.3) Overall control of each function in the AMX-84 is accomplished through the 64-pin header connector on the logic board. These inputs are all normally pulled high to the regulated +5 vdc supply on the logic board. Referring to the Input Logic Buffer Circuit, the input signal is filtered through L and C to reduce the susceptibility of the unit to rf and stray transient signals induced in the incoming ribbon cable. IC-A as normally supplied is a 4049 type inverter. (Note that if the user desires to have all audio signals "ON" unless the data input is pulled low, the 4049s can be replaced with 4050 type buffers.) In order to generate the 15 volt switch transition required by the input cards, and also prevent the data

5.6 L.E.D. ACTIVITY DRIVER CIRCUITS ON LOGIC BOARD (ref. Dwg 6.4) The "Display" data signal from the Input Buffer Logic Circuit feeds IC-A of the Activity LED Driver Circuit. There is a section of IC-A corresponding to each of the 8 input cards. IC-A output is high when any of its inputs are high. IC-A drives IC-B which provides the current necessary to drive the LED.s. The output of IC-B also feeds the status Tally Outputs through R-D and CR-A.

5.7 POWER SUPPLIES ON LOGIC BOARD (ref. Dwg 6.5) Power is provided to the AMX-84 through the terminal strip on the logic board. Rated input voltage is 24 vdc, although as much as 33 vdc may be applied. The power is decoupled through R90/C47 and further decoupled through R91/C48. The resulting voltage is nominally 22 vdc (depending on input voltage) and is used to feed all points indicated as +24 vdc on the schematics. VR1 regulates the filtered 22 vdc down to +15 vdc. The 15 vdc is used to feed various ICs on the logic board (used for control logic switching to feed the audio input cards), and also feeds to the Output Card through a jumper. VR2 regulates the +15 vdc down to +5 vdc. The 5 vdc is used only for the pullup resistors and supply on the first data input buffer ICs. The +I5 vdc is also regulated down by VR3 to approx 7.85 vdc and feeds the circuit points identified as 7.5 vdc. The term 7.5 vdc is used, since this is the audio common voltage for all the audio input cards, and the +15 vdc is the positive supply rail for those cards. Since the audio ICs used on the input card are capable of swinging closer to the positive rail than to ground, this common reference is set to 7.85 vdc to achieve maximum bipolar swing from those input ICs.

5.7 AUDIO SUMMING/OUTPUT CIRCUITS (ref. Dwg 6.8) Audio is actively summed in IC-A on the Output Card. Audio is coupled through C-H. Capacitor C-H is required because the audio common reference from the audio input cards is +7.5 vdc, whereas the audio common reference on the output card is +12 vdc. A second summing input is provided through C-A and R-C. This second input is active at all times and is fed from the "Mix Inputs" terminal strip on the Output Card. Any external audio signal desired to ALWAYS feed a particular output of the AMX-84 may be connected to these "Mix Inputs". Section A of IC-A inverts the output signal to provide a differential balanced output. This signal is coupled through capacitors C-D and C-E to the output terminal strips. "Mix audio" enters the Output Card through Jl. The 7.5 vdc common reference for the audio cards is also fed to the audio input cards via Jl. The +15 vdc applied to the Output Card by the jumper from the logic card is divided down to +12 vdc by R81 and R82. R81 in conjunction with C69 decouples and filters the 12 volts for use as the audio common on the Output Card.

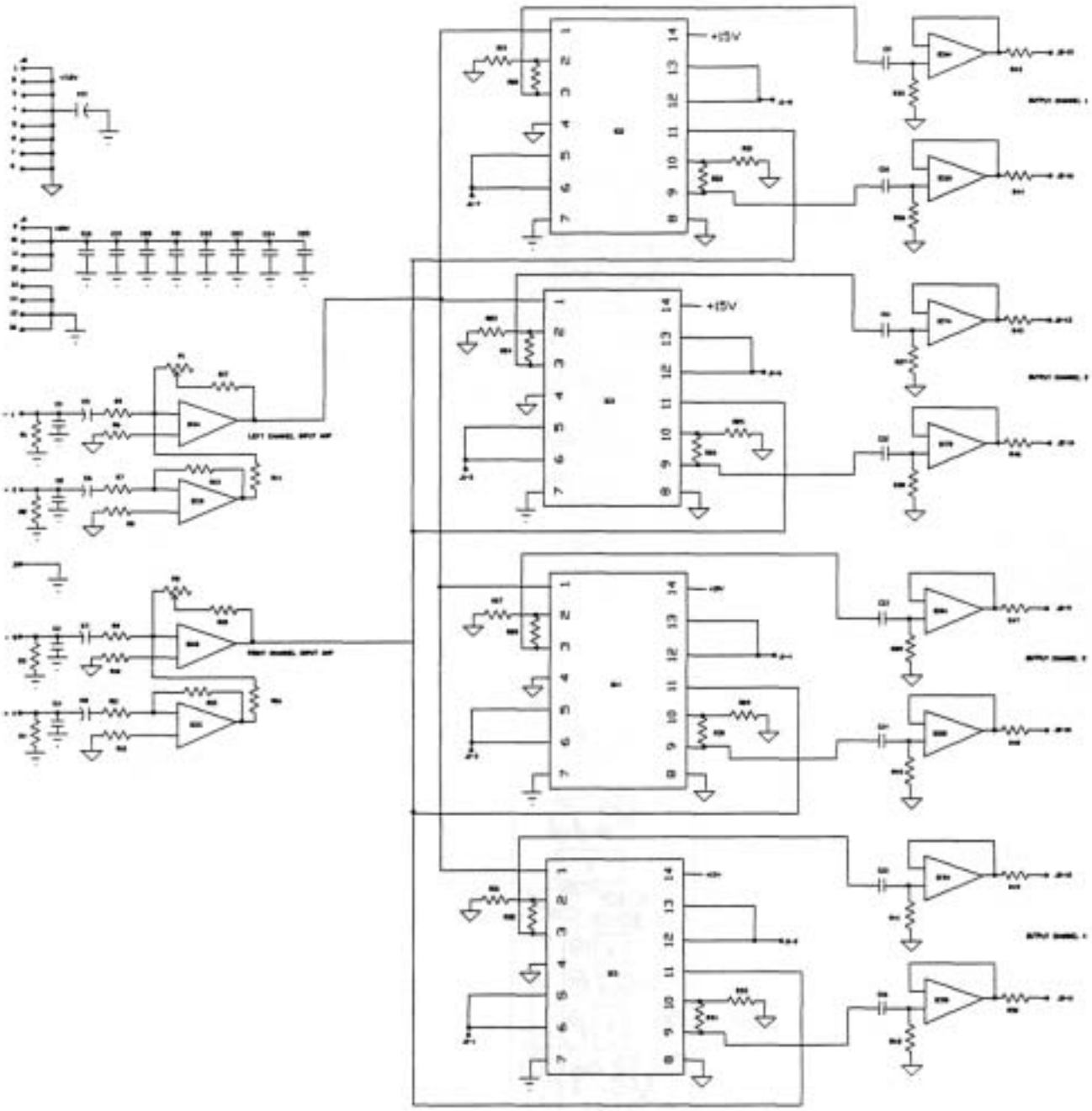

6.0 Input Board Schematic

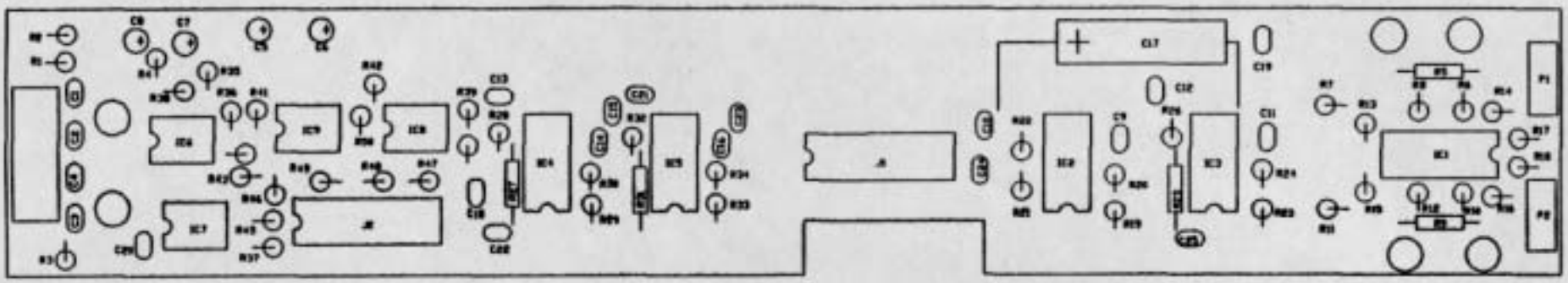

6.1 Input Board Parts Layout

6 . 2 AMX-84 INPUT BOARD PARTS LIST

COMPONENT			QTY	PART NO	DESCRIPTION
C	1	THRU 4	4	02-07102-050	.001 µF 50v Ceramic
C	5	THRU 8	4	02-01100-050	10 µF 50v Alumelec
C	9	THRU 16	8	02-03330-693	33 µF 6.3v Bipolar
C	17		1	02-02471-025	470 µF 25v AlumelecAx
C	18	THRU 25	8	02-12104-050	0.l µF 50v Mono Z5U
IC	1		1	06-01003-001	LM348N
IC	2	THRU 5	4	06-02001-003	CD4066B
IC	6	THRU 9	4	06-01001-001	NE5532P
J	1	THRU 2	2	03-01001-016	16 pin mchnd IC sokt
P	1	THRU 2	2	01-09253-994 Piher PT-10H-25K	25k trimpot
R	1	THRU 4	4	01-01103-994	10k 1/4w 5%
R	5	THRU 12	8	01-05472-994	4.75 kΩ 1%
R	13	THRU 18	6	01-05332-994	3.32 kΩ 1%
R	19		1	01-05103-994	10 kΩ 1%
R	20		1	01-05102-994	1.0 kΩ 1%
R	21		1	01-05103-994	10 kΩ 1%
R	22		1	01-05102-994	1.0 kΩ 1%
R	23		1	01-05103-994	10 kΩ 1%
R	24		1	01-05102-994	1.0 kΩ 1%
R	25		1	01-05103-994	10 kΩ 1%
R	26		1	01-05102-994	1.0 kΩ 1%
R	27		1	01-05103-994	10 kΩ 1%
R	28		1	01-05102-994	1.0 kΩ 1%
R	29		1	01-05103-994	10 kΩ 1%
R	30		1	01-05102-994	1.0 kΩ 1%
R	31		1	01-05103-994	10 kΩ 1%
R	32		1	01-05102-994	1.0 kΩ 1%
R	33		1	01-05103-994	10 kΩ 1%
R	34		1	01-05102-994	1.0 kΩ 1%
R	35	THRU 42	8	01-01103-994	10 kΩ l/4w 5%
R	43	THRU 50	8	01-05223-994	22.I kΩ 1/4w 1%
SK	1	THRU 5	5	03-01002-014	14 pin IC sockt
SK	6	THRU 9	4	03-01002-008	8 pin IC sockt
TB	1		1	03-06001-005	5 pos R/A term board

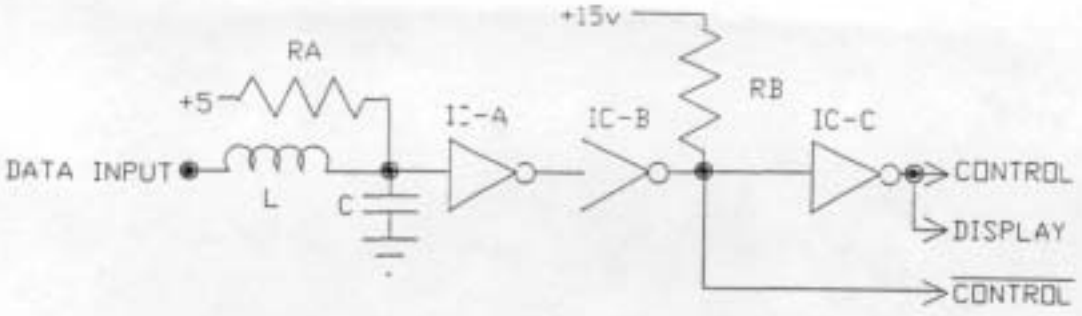

INPUT LOGIC BUFFER CIRCUIT

DATA INPUTS	R -A	R -B	C	L	IC -A	SECTION	IC -B	SECTION
1	R 1	R 33	C 1	L 1	IC 1	A	IC 7	A
2	R 2	R 34	C 2	L 2	IC 1	F	IC 7	B
3	R 3	R 35	C 3	L 3	IC 1	B	IC 7	C
4	R 4	R 36	C 4	L 4	IC 1	E	IC 7	D
5	R 5	R 37	C 5	L 5	IC 1	C	IC 7	E
6	R 6	R 38	C 6	L 6	IC 1	D	IC 7	F
7	R 7	R 39	C 7	L 7	IC 2	A	IC 8	A
8	R 8	R 40	C 8	L 8	IC 2	F	IC 8	B
9	R 9	R 41	C 9	L 9	IC 2	B	IC 8	C
10	R 10	R 42	C 10	L 10	IC 2	E	IC 8	D
11	R 11	R 43	C 11	L 11	IC 2	C	IC 8	E
12	R 12	R 44	C 12	L 12	IC 2	D	IC 8	F
13	R 13	R 45	C 13	L 13	IC 3	A	IC 8	G
14	R 14	R 46	C 14	L 14	IC 3	F	IC 9	A
15	R 15	R 47	C 15	L 15	IC 3	B	IC 9	B
16	R 16	R 48	C 16	L 16	IC 3	E	IC 9	C
17	R 17	R 49	C 17	L 17	IC 3	C	IC 9	D
18	R 18	R 50	C 18	L 18	IC 3	D	IC 9	E
19	R 19	R 51	C 19	L 19	IC 4	A	IC 9	F
20	R 20	R 52	C 20	L 20	IC 4	F	IC 9	G
21	R 21	R 53	C 21	L 21	IC 4	B	IC 10	A
22	R 22	R 54	C 22	L 22	IC 4	E	IC 10	B
23	R 23	R 55	C 23	L 23	IC 4	C	IC 10	C
24	R 24	R 56	C 24	L 24	IC 4	D	IC 10	D
25	R 25	R 57	C 25	L 25	IC 5	A	IC 10	E
26	R 26	R 58	C 26	L 26	IC 5	F	IC 10	F
27	R 27	R 59	C 27	L 27	IC 5	B	IC 10	G
28	R 28	R 60	C 28	L 28	IC 5	E	IC 11	A
29	R 29	R 61	C 29	L 29	IC 5	C	IC 11	B
30	R 30	R 62	C 30	L 30	IC 5	D	IC 11	C
31	R 31	R 63	C 31	L 31	IC 6	A	IC 11	D
32	R 32	R 64	C 32	L 32	IC 6	F	IC 11	E

6.3 Logic Board Input Logic Buffer Schematic

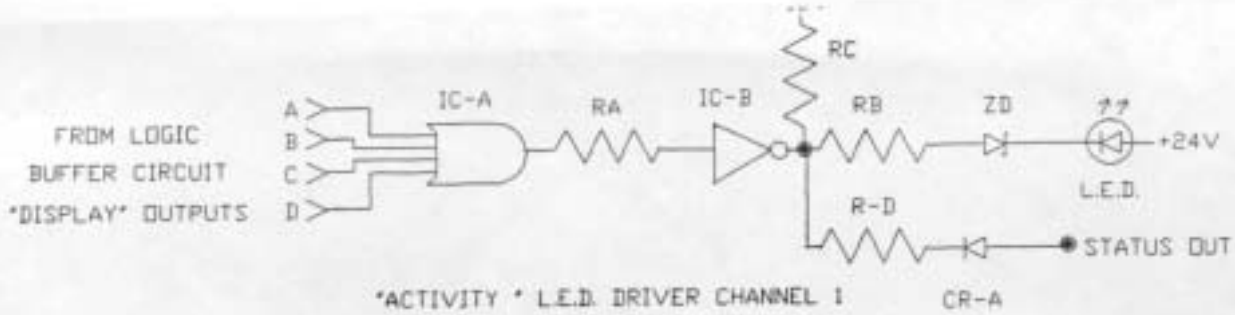

"ACTIVITY " L.E.D. DRIVER CHANNEL 1

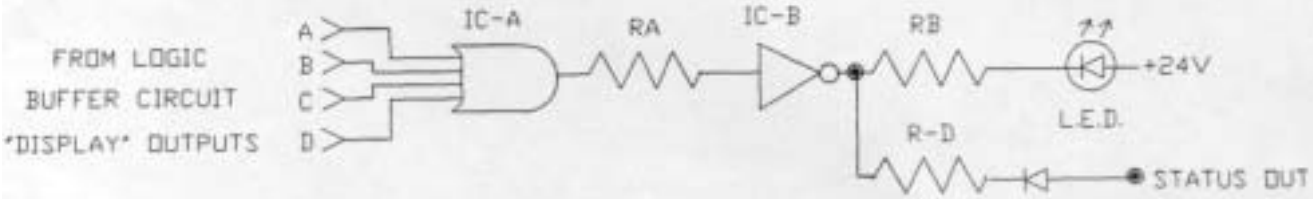

"ACTIVITY L.E.D. DRIVER CHANNELS 2 THROUGH 8

DATA INPUTS	R -A	R -B	R-C	R-D	CR -A	IC -A	SEC-TION	IC -B	SEC-TION	ZD	LED
1	R 65	R 89		R 81	CR 2	IC 18	A	IC 22	A		8
2	R	R				IC 18	B	IC			
3	R	R				IC 18	C	IC			
4	R	R				IC 18	D	IC			
5	R 66	R 88		R 80	CR 3	IC 18	H	IC 22	B		7
6	R	R				IC 18	G	IC			
7	R	R				IC 18	F	IC			
8	R	R				IC 18	E	IC			
9	R 67	R 87		R 79	CR 4	IC 19	A	IC 22	C		6
10	R	R				IC 19	B	IC			
11	R	R				IC 19	C	IC			
12	R	R				IC 19	D	IC			
13	R 68	R 86		R 78	CR 5	IC 19	H	IC 22	D		5
14	R	R				IC 19	G	IC			
15	R	R				IC 19	F	IC			
16	R	R				IC 19	E	IC			
17	R 69	R 85		R 77	CR 6	IC 20	A	IC 22	E		4
18	R	R				IC 20	B	IC			
19	R	R				IC 20	C	IC			
20	R	R				IC 20	D	IC			
21	R 70	R 84		R 76	CR 7	IC 20	H	IC 22	F		3
22	R	R				IC 20	G	IC			
23	R	R				IC 20	F	IC			
24	R	R				IC 20	E	IC			
25	R 71	R 83		R 75	CR 8	IC 21	A	IC 22	G		2
26	R	R				IC 21	B	IC			
27	R	R				IC 21	C	IC			
28	R	R				IC 21	D	IC			
29	R 72	R 82	R 73	R 74	CR 9	IC 21	H	IC 11	F	2	1
30	R	R				IC 21	G	IC			
31	R	R				IC 21	F	IC			
32	R	R				IC 21	E	IC			

6.4 Logic Board Activity L.E.D. Driver Schematic

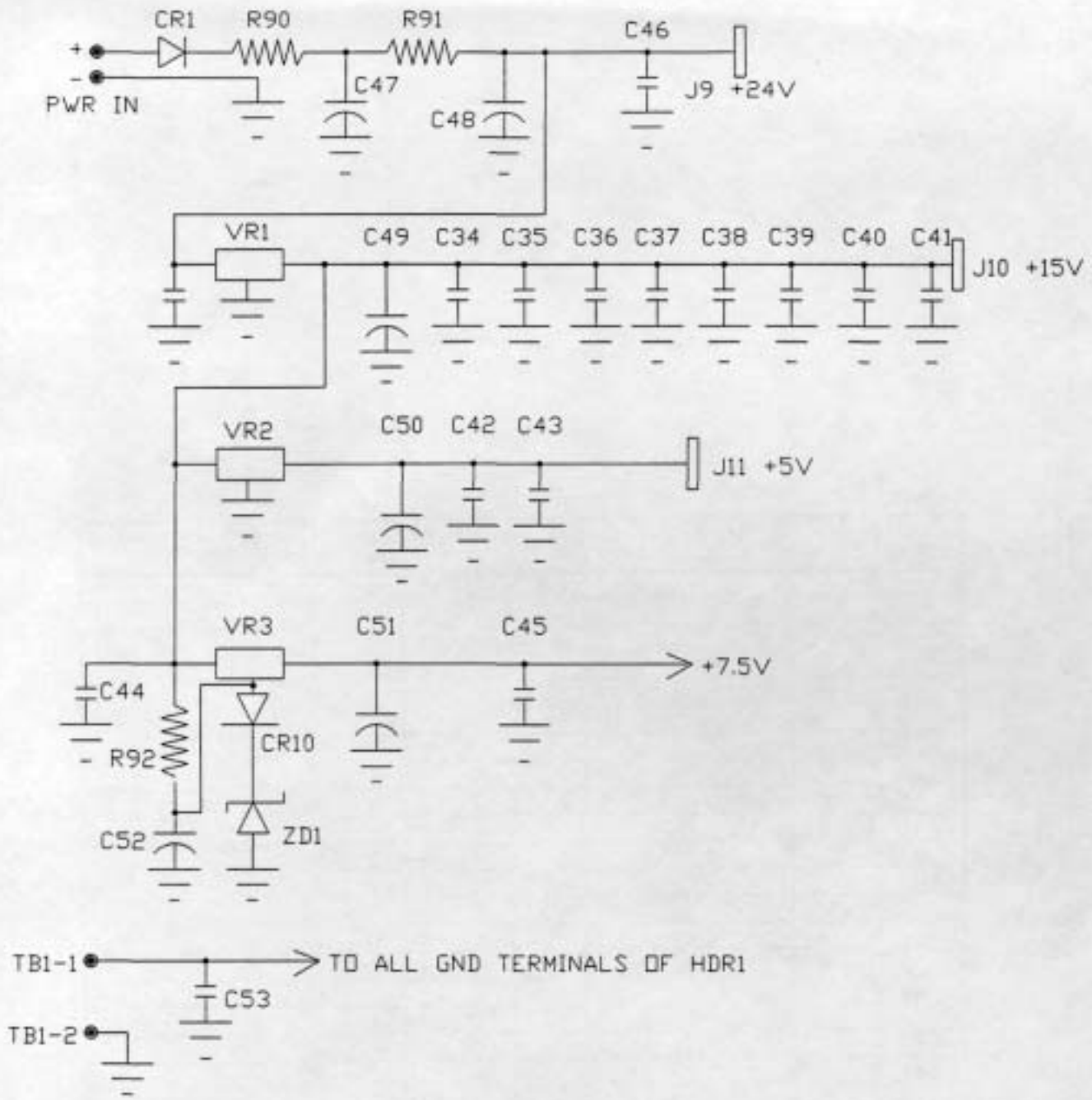

6.5 Logic Board Power Supply Schematic

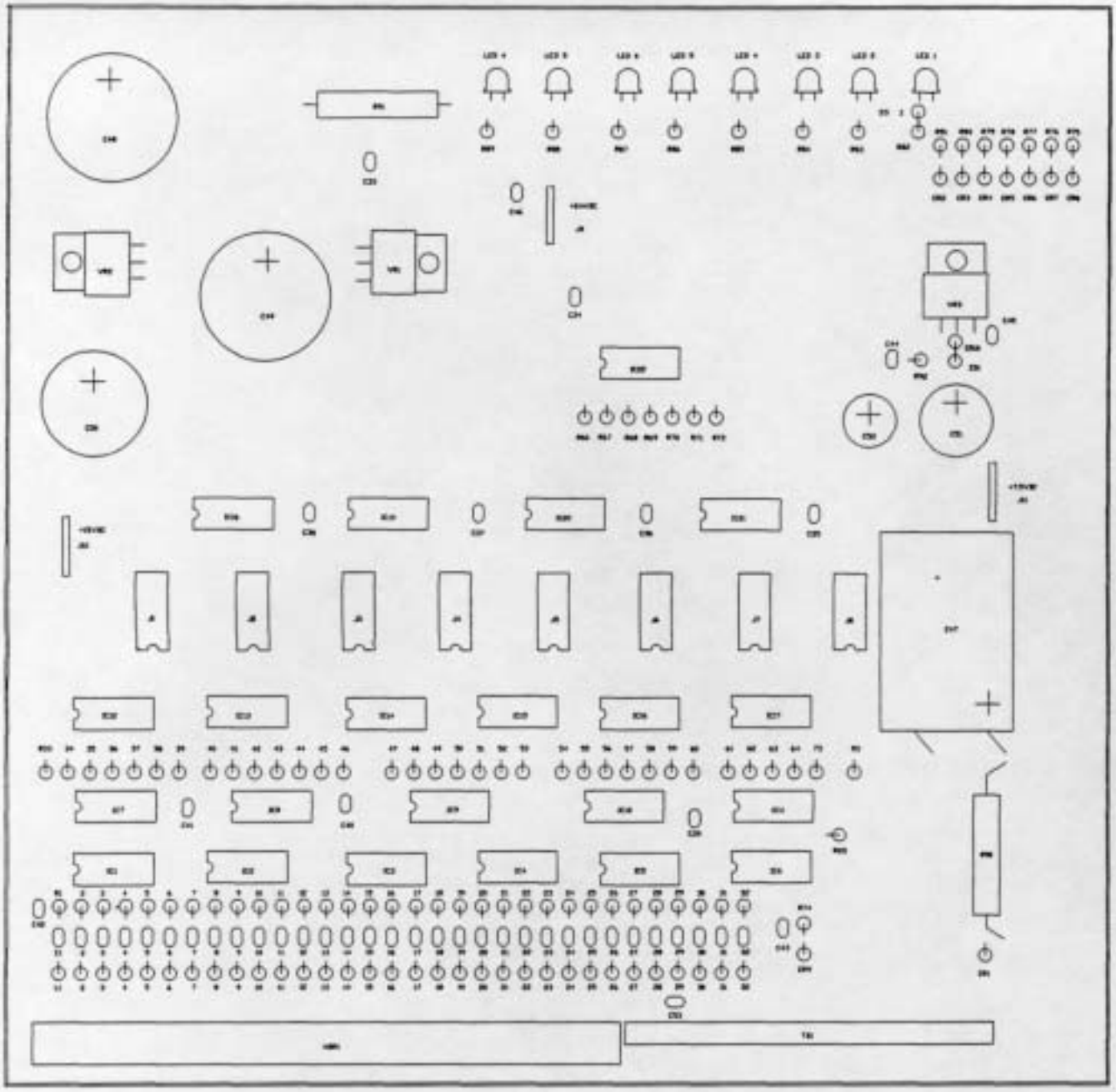

6.6 Logic Board Parts Layout

6.7 AMX-84 LOGIC BOARD PARTS LIST

COMPONENT			QTY	PART NO	DESCRIPTION
C	1	THRU 46	46	02-12104-050	0.1 µF 50v Mono Z5U
C	47		1	02-04103-035	10000 µF 35v AlumElec
C	48	THRU 49	2	02-01222-035	2200 µF 35v Alumelec
C	50	THRU 51	2	02-01471-035	470 µF 35v Alumelec
C	52		1	02-01100-050	10 µF 50v Alumelec
C	53		1	02-12104-050	0.1 µF 50v Mono Z5U
CR	1		1	07-50001-100	1N4001
CR	2	THRU 10	9	07-51001-000	1N4148
HDR	1		1	03-05001-064	64 PIN R/A EJECT HDR
IC	1	THRU 6	6	06-02001-002	CD4049B
IC	7	THRU 11	5	06-01004-001	ULN2003N
IC	12	THRU 17	6	06-02001-002	CD4049B
IC	18	THRU 21	4	06-02001-001	CD4072B
IC	22		1	06-01004-001	ULN2003N
J	1	THRU 8	8	03-01002-016	16 pin 1C sockt
J	9	THRU 11	3	03-12000-250	Fasten Term
				Zierick 836	
L	1	THRU 32	32	04-05001-001	Ferrite Supressor
LED	1	THRU 8	8	07-80101-901	Red Led w/ Holder
				Lumex SSF-LXH103ID	
				Kingbrght L-934CB/ID	
R	1	THRU 64	64	01-01103-994	10 kΩ l/4w 5%
R	65	THRU 72	8	01-01822-994	8.2 kΩ 1/4w 5%
R	82		1	01-01682-994	6.8 kΩ l/4w 5%
R	83	THRU 89	7	01-01822-994	8.2 kΩ l/4w 5%
R	73		1	01-01103-994	10 kΩ l/4w 5%
R	74	THRU 81	8	01-01102-994	1.0 kΩ l/4w 5%
R	90		1	01-03439-005	4.3 Ω 5w
R	91		1	01-03399-005	3.9 Ω 5w
R	92		1	01-01472-994	4.7kΩ l/4w 5%
R	93		1	01-01103-994	10 kΩ l/4w 5%
SK	1	THRU 17	17	03-01002-016	16 pin 1C sockt
SK	18	THRU 21	4	03-01002-014	14 pin 1C sockt
SK	22		1	03-01002-016	16 pin 1C sockt
TB	1		1	03-06000-012	12 pos term board
				Buchanan SSB4S12	
				RIA 31001112	
VR	1		1	06-02015-001	Pos Reg 15v 3 pin
				LM340T-15 / 7815 Mot	
VR	2	THRU 3	2	06-02005-001	Pos Reg 5v 3 pin
ZD	1		1	07-53294-992	2.4v .5w 5% 1N5221B
ZD	2		1	07-53991-992	9.1v .5w 5% 1N5239B

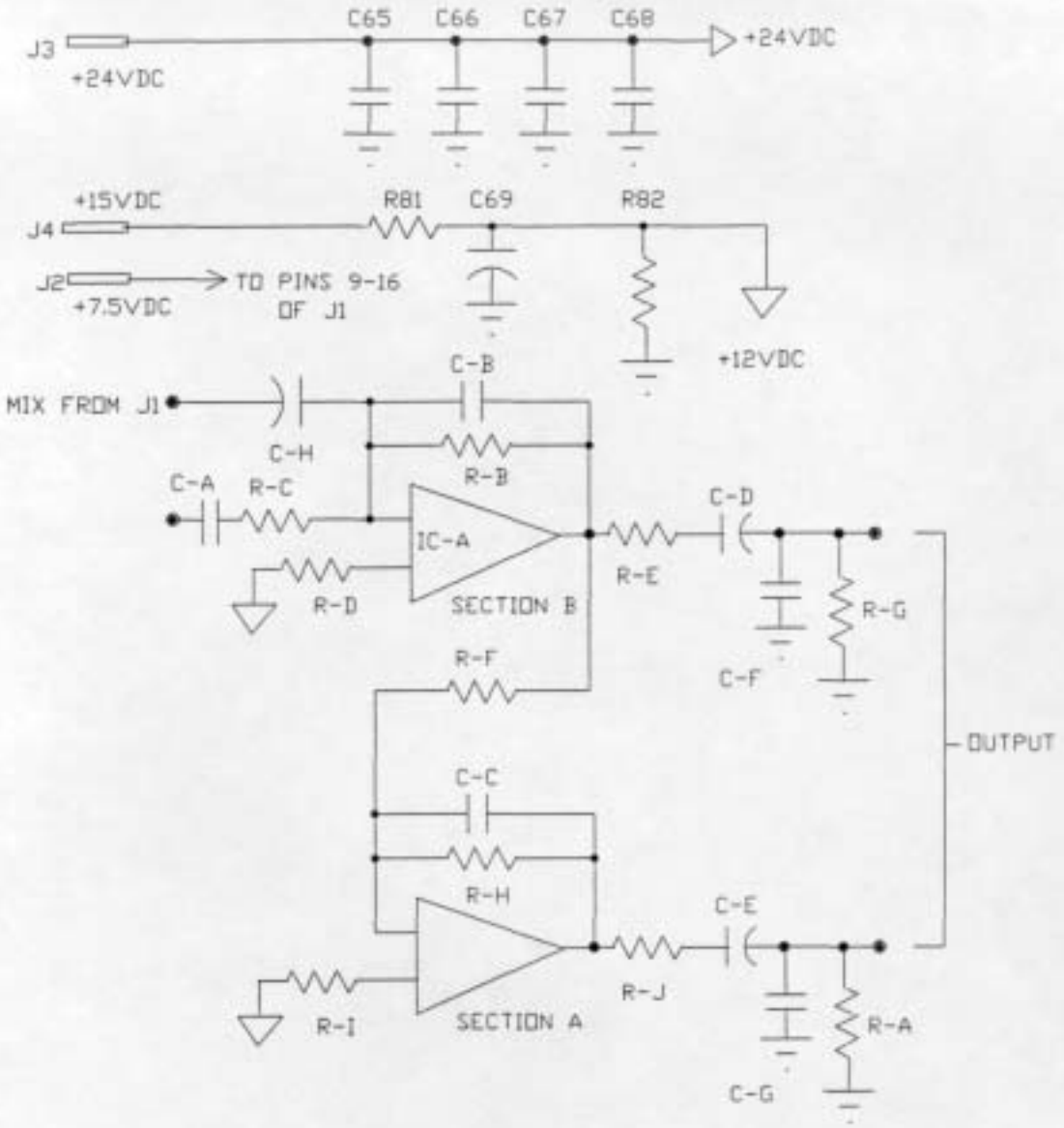

OUTPUT	R										C							
CHANNEL	A	B	C	D	E	F	G	H	I	J	A	B	C	D	E	F	G	H
1L	66	1	28	34	49	10	65	9	33	50	12	17	25	33	34	49	50	1
1R	68	2	27	36	51	12	67	11	35	52	11	18	26	35	36	51	52	2
2L	70	3	26	38	53	14	69	13	37	54	10	19	27	37	38	53	54	3
2R	72	4	25	40	55	16	71	15	39	56	9	20	28	39	40	55	56	4
3L	74	5	30	42	57	18	73	17	41	58	14	21	29	41	42	57	58	5
3R	76	6	32	44	59	20	75	19	43	60	16	22	30	43	44	59	60	6
4L	78	7	31	46	61	22	77	21	45	62	15	23	31	45	46	61	62	7
4R	80	8	29	48	63	24	79	23	47	64	13	24	32	47	48	63	64	8

6.8 Output Board Schematic

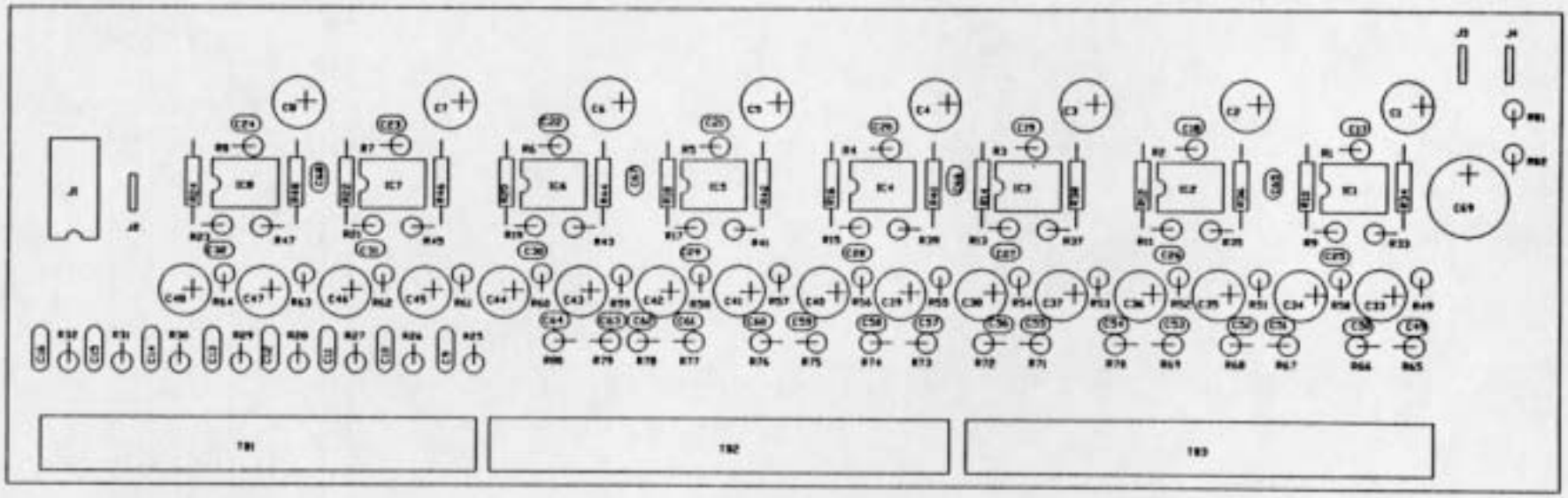

6.9 Output Board Parts Layout

7.0 AMX-84 OUTPUT BOARD PARTS LIST

COMPONENT			QTY	PART NO	DESCRIPTION
C	1	THRU 8	8	02-01101-025	100 µF 25v Alumelec
C	9	THRU 16	8	02-08105-050	1.0 µF 50v Monocap
C	17	THRU 32	16	02-08680-050	68 pf 50v NPO
C	33	THRU 48	16	02-01101-025	100 µF 25v Alumelec
C	49	THRU 64	16	02-07102-050	.001 µF 50v Ceramic
C	65	THRU 68	4	02-12104-050	0.1 µF 50v Mono Z5U
C	69		1	02-01221-025	220 µF 25v Alumelec
IC	1	THRU 8	8	06-01001-001	NE5532P
J	1		1	03-01001-016	16 pin mchnd 1C sokt
J	2	THRU 4	3	03-12002-250	Fasten R/A Term
R	1	THRU 32	32	01-05223-994	22.1 kΩ 1/4w 1%
R	33	THRU 48	16	01-01103-994	10 kΩ l/4w 5%
R	49	THRU 64	16	01-01680-994	68 Ω l/4w 5%
R	65	THRU 80	16	01-01103-994	10 kΩ 1/4w 5%
R	81		1	01-01433-994	43 kΩ l/4w 5%
R	82		1	01-01204-994	200 kΩ l/4w 5%
SK	1	THRU 8	8	03-01002-008	8 pin 1C sockt
TB	1		1	03-06000-009	9 pos term board Buchanan SSB4S09 RIA 31001109
TB	2	THRU 3	2	03-06000-010 10	pos term board Buchanan SSB4S10 RIA 31001110

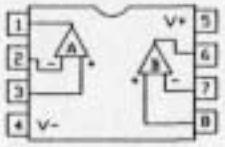

NE5532

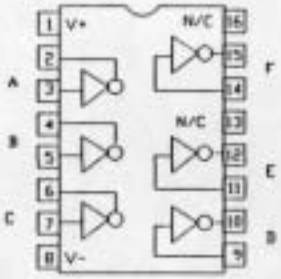

CD4049B

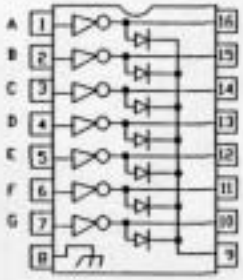

ULN2003

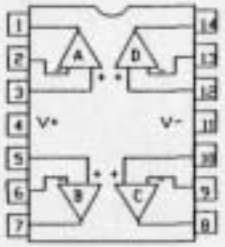

LM348

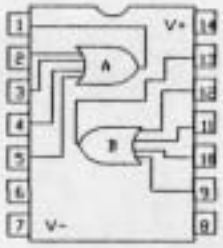

CD4072B

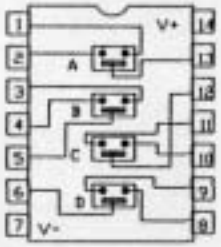

CD4066B

7.1 IC PINOUT

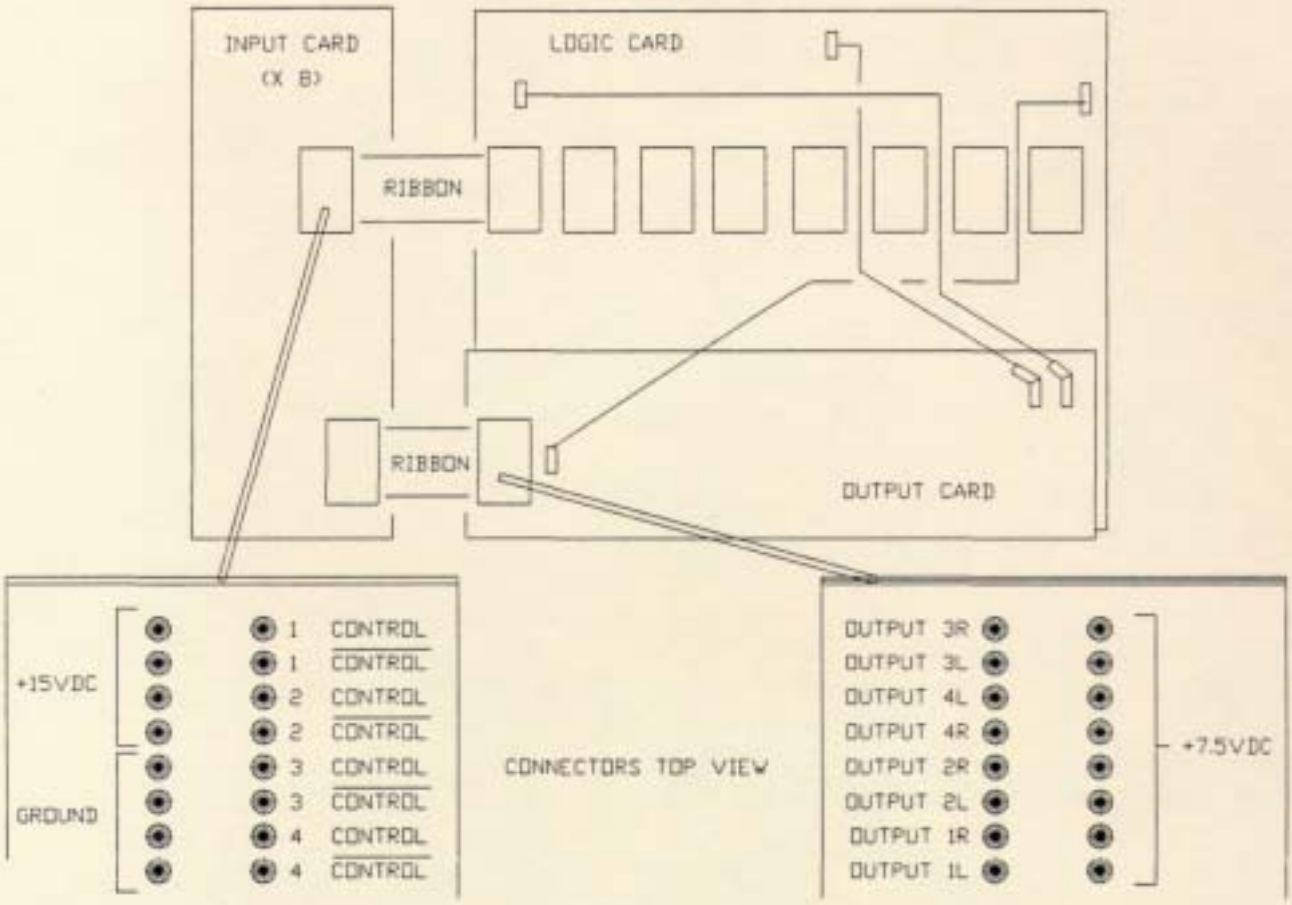

Board Interconnect Diagram